Trimless recessed luminaire

Twins A25 16W 840 DA

ze11009417

220-240 V IP20 Ra >80 MAC 3

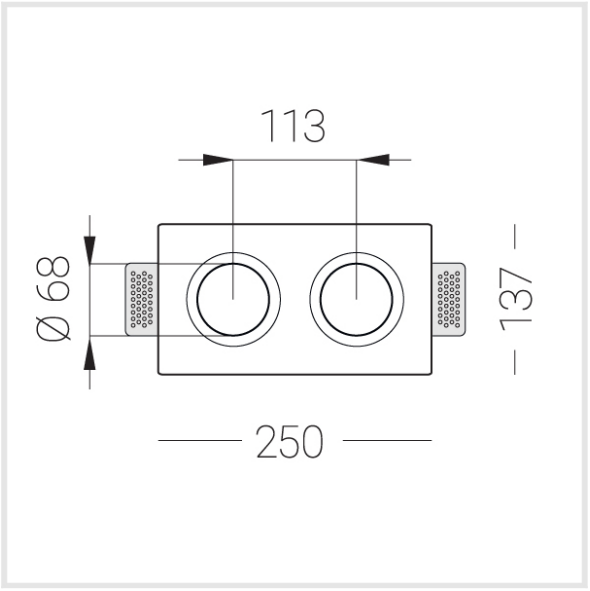

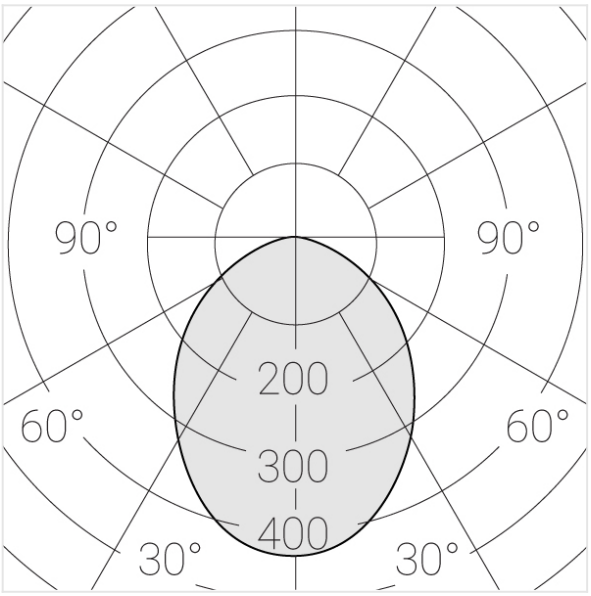

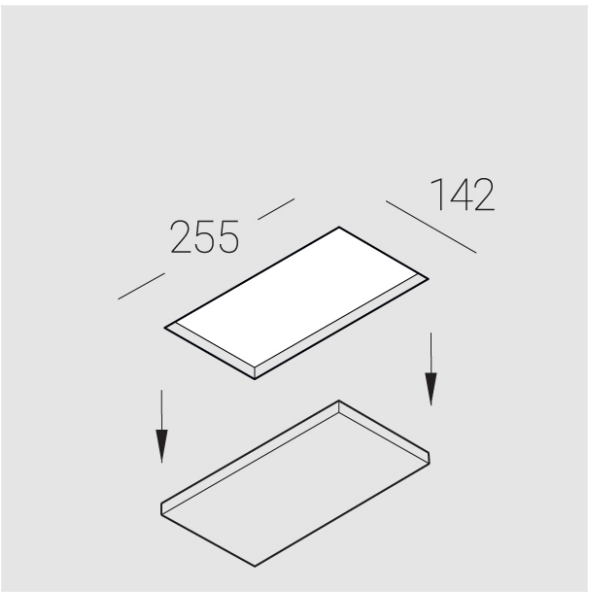

Complectation

Body	1
LED module	2
Conrol gear	1
Fastener	2
Screw x6	4
Screw self-tapping	2
Washer D5	4
Suction Cup	1

Dimming by TRIAC accessible on request

The manufacturer reserves the right to change the configuration of the LED luminaire.

Specifications

Measurements:	232x137x70 mm
Net weight:	1.49 kg

Double

Body:	Gypsum
Illuminant:	LED

Electrical safety class:	II
Degree of protection:	IP20
Rated power:	15 w
Luminaire luminous flux*:	1376 lm
Light output*:	92 lm/w
Colorful temperature*:	4000 K
Color rendering index*:	Ra >80
Color temperature stability*:	MAC 3
cos *:	0.97
PRA:	LCA 17W 250-700mA one4all SC PRE

All parameters marked with * are calculated values.
Zenith uses tried and tested components from leading suppliers.
However, it is possible for some LED technology-related faults to occur over the life of the product.

** — the manufacturer reserves the right to replace the power supply with a similar one with the same characteristics.

© Zenit STP