Trimless recessed luminaire

Twins R25 22W 940 IP44/20 DW

ze11009770

220-240 V IP44 Ra >90 MAC 3

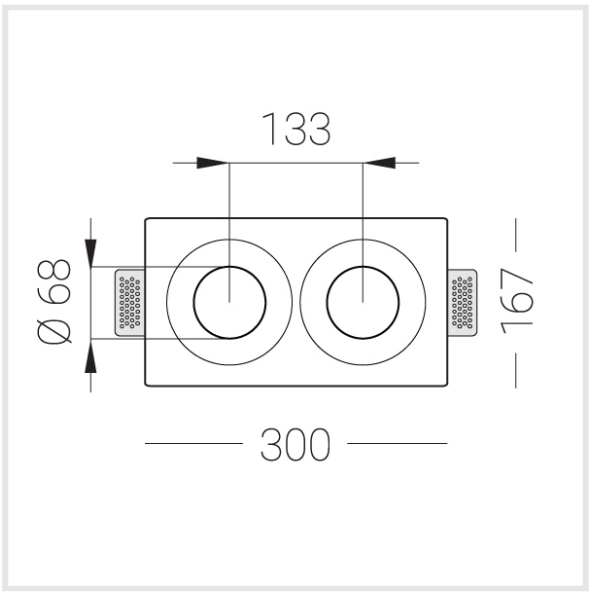

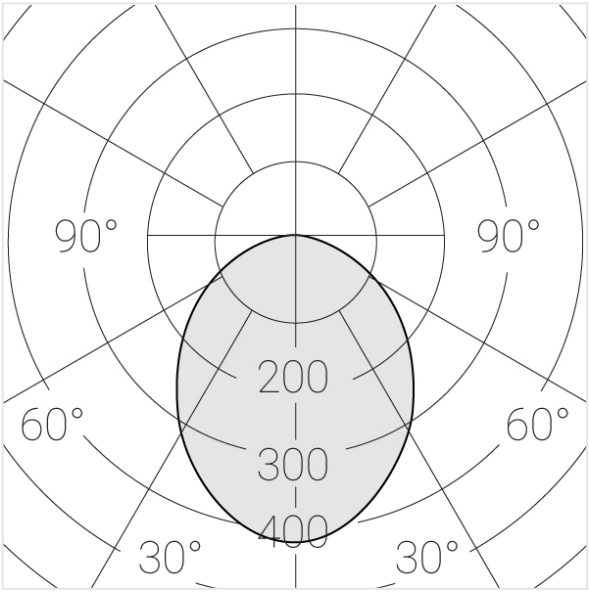

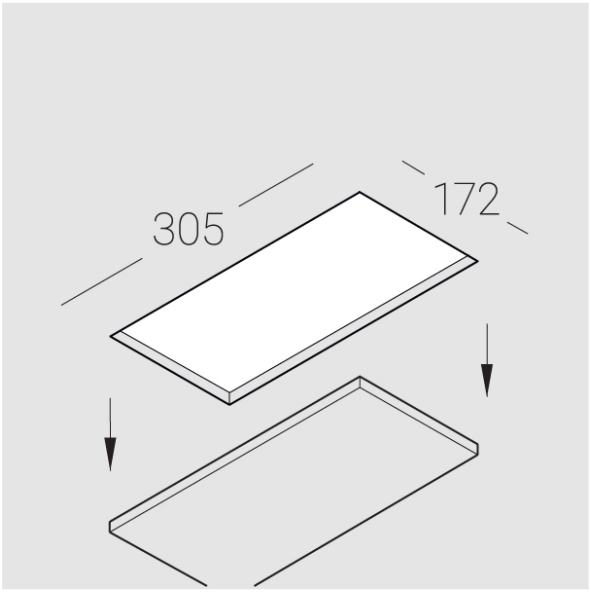

Complectation

Body	1
LED module	2
Conrol gear	1
Fastener	2
Screw x6	4
Screw self-tapping	2
Washer D5	4
Suction Cup	1

Dimming by TRIAC accessible on request

The manufacturer reserves the right to change the configuration of the LED luminaire.

Specifications

Measurements:	300x167x70 mm
Net weight:	1.82 kg
Double	
Body:	Gypsum
Illuminant:	LED
Electrical safety class:	II
Degree of protection:	IP44
Rated power:	21.1 w
Luminaire luminous flux*:	1656 lm
Light output*:	78 lm/w
Colorful temperature*:	4000 K
Color rendering index*:	Ra >90
Color temperature stability*:	MAC 3
cos *:	0.93
PRA:	LC 25/350-1050/50 bDW SC PRE2

All parameters marked with * are calculated values.
Zenith uses tried and tested components from leading suppliers.
However, it is possible for some LED technology-related faults to occur over the life of the product.

** — the manufacturer reserves the right to replace the power supply with a similar one with the same characteristics.

© Zenit STP