Suspension luminaire

EVO Hang IN Black D300 45W 930 DA

ze37001024

220-240 V IP20 Ra >90 MAC 3

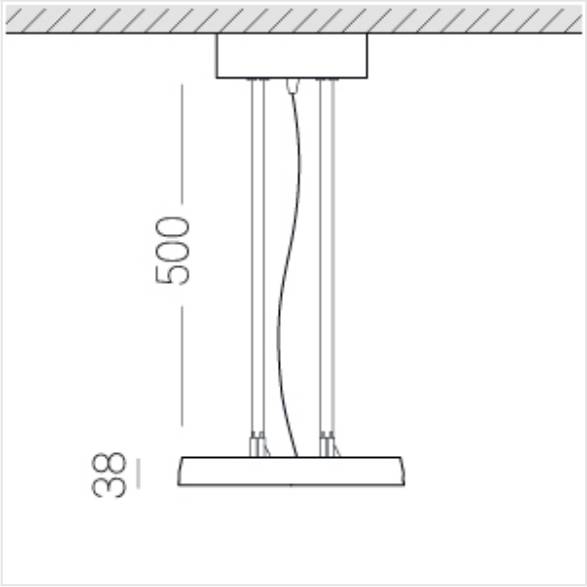

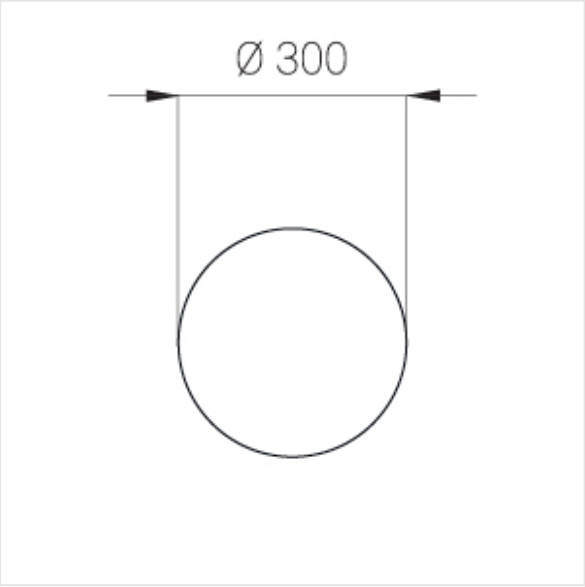

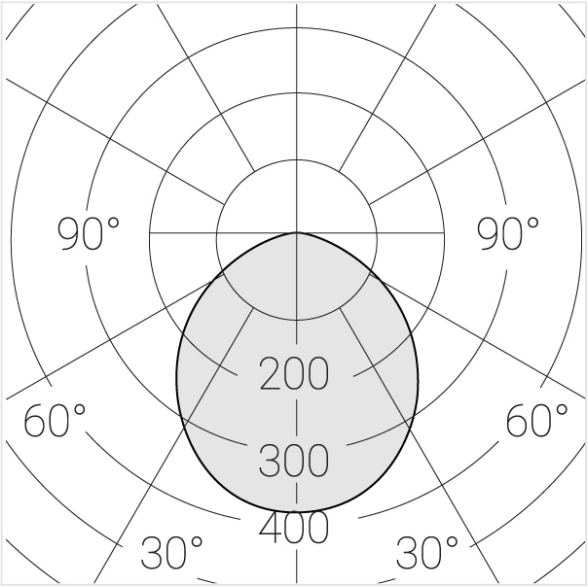

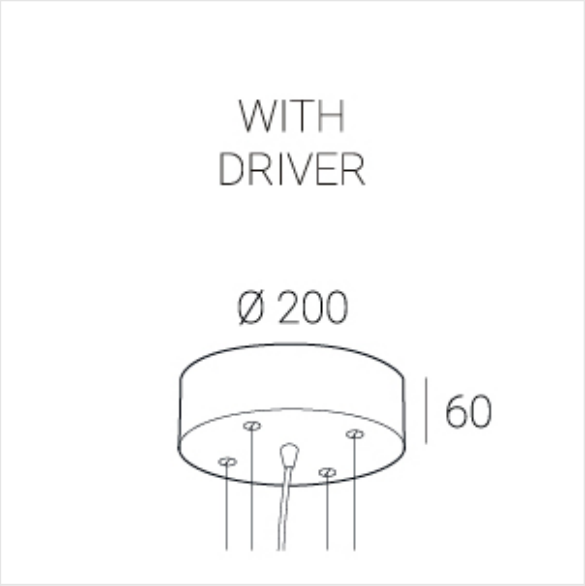

Complectation

LED module	1
Ceiling attachment	1
Suspension cord	4
Cable	1

IN - power supply integrated into the ceiling cup, see installation manual.

The manufacturer reserves the right to change the configuration of the LED luminaire.

Specifications

Measurements:	D300x38; D160x25 mm
Round	
Body:	Aluminum
Illuminant:	LED
Electrical safety class:	I
Degree of protection:	IP20
Rated power:	44.5 w
Luminaire luminous flux*:	4203 lm
Light output*:	94 lm/w
Colorful temperature*:	3000 K
Color rendering index*:	Ra >90
Color temperature stability*:	MAC 3
cos *:	0.96
PRA:	LCA 45W 500-1400mA one4all SR PRE

All parameters marked with * are calculated values.
Zenith uses tried and tested components from leading suppliers.
However, it is possible for some LED technology-related faults to occur over the life of the product.

** — the manufacturer reserves the right to replace the power supply with a similar one with the same characteristics.

© Zenit STP