# Suspension luminaire на штанге

## EVO Move IN White D550 78W 840 DA

## ze77001147

220-240 V IP20 Ra >80 MAC 3

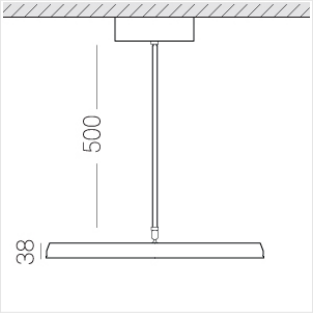


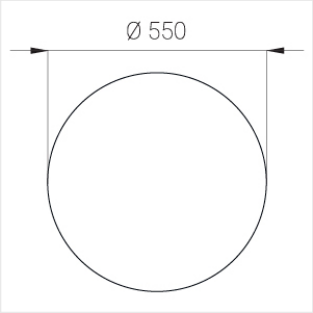


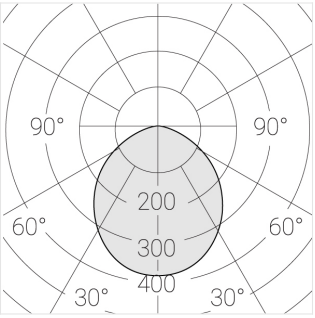


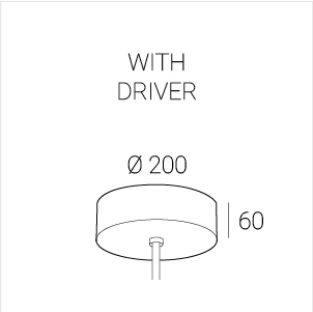


## Complectation

| | |
|---|---|
| LED module | 1 |
| Fastener | 1 |
| Ceiling attachment | 1 |

IN - power supply integrated into the ceiling cup, see installation manual.

The manufacturer reserves the right to change the configuration of the LED luminaire.

## Specifications

| | |
|---|---|
| Measurements: | D550x38; D160x25 mm |
| Round | |
| Body: | Aluminum |
| Illuminant: | LED |
| Electrical safety class: | I |
| Degree of protection: | IP20 |
| Rated power: | 77.3 w |
| Luminaire luminous flux*: | 9834 lm |
| Light output*: | 127.00 lm/w |
| Colorful temperature*: | 4000 K |
| Color rendering index*: | Ra >80 |
| Color temperature stability*: | MAC 3 |
| cos *: | 0.95 |
| PRA: | LCA 100W 1100–2100mA one4all SR PRE |

All parameters marked with * are calculated values.
Zenith uses tried and tested components from leading suppliers.
However, it is possible for some LED technology-related faults to occur over the life of the product.

** — the manufacturer reserves the right to replace the power supply with a similar one with the same characteristics.

© Zenit STP